REVISION RECORD			
LTR	ECO NO:	APPROVED:	DATE:

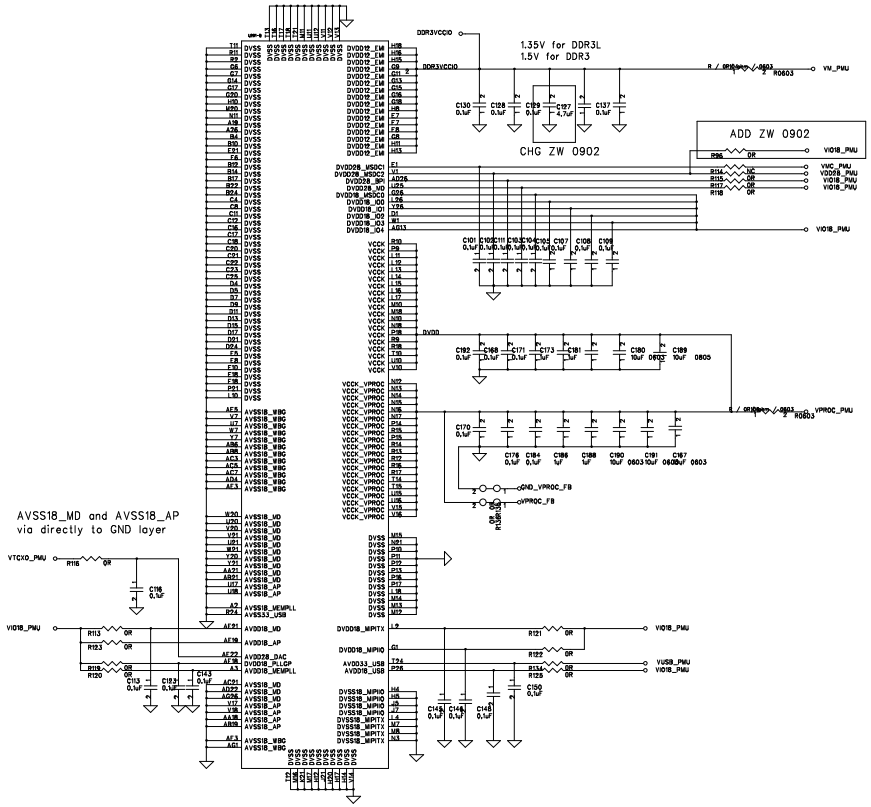

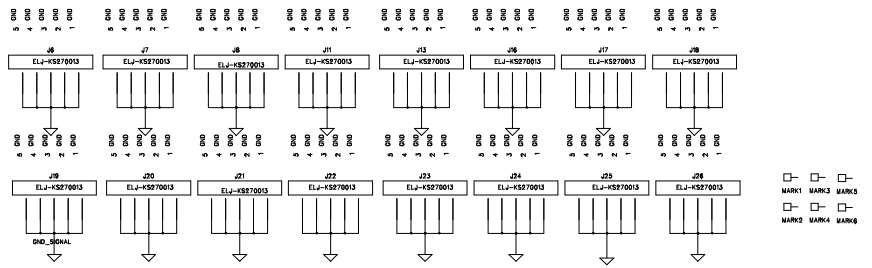

COMPANY:					
TITLE:					
DRAWN:	DATE:	CODE:	SIZE: A1	DRAWING NO:	REV:
CHECKED:	DATE:				
QUALITY CONTROL:	DATE:				
RELEASED:	DATE:	SCALE:	SHEET: 1 OF 15		

REVISION RECORD			
LTR	ECO NO:	APPROVED:	DATE:

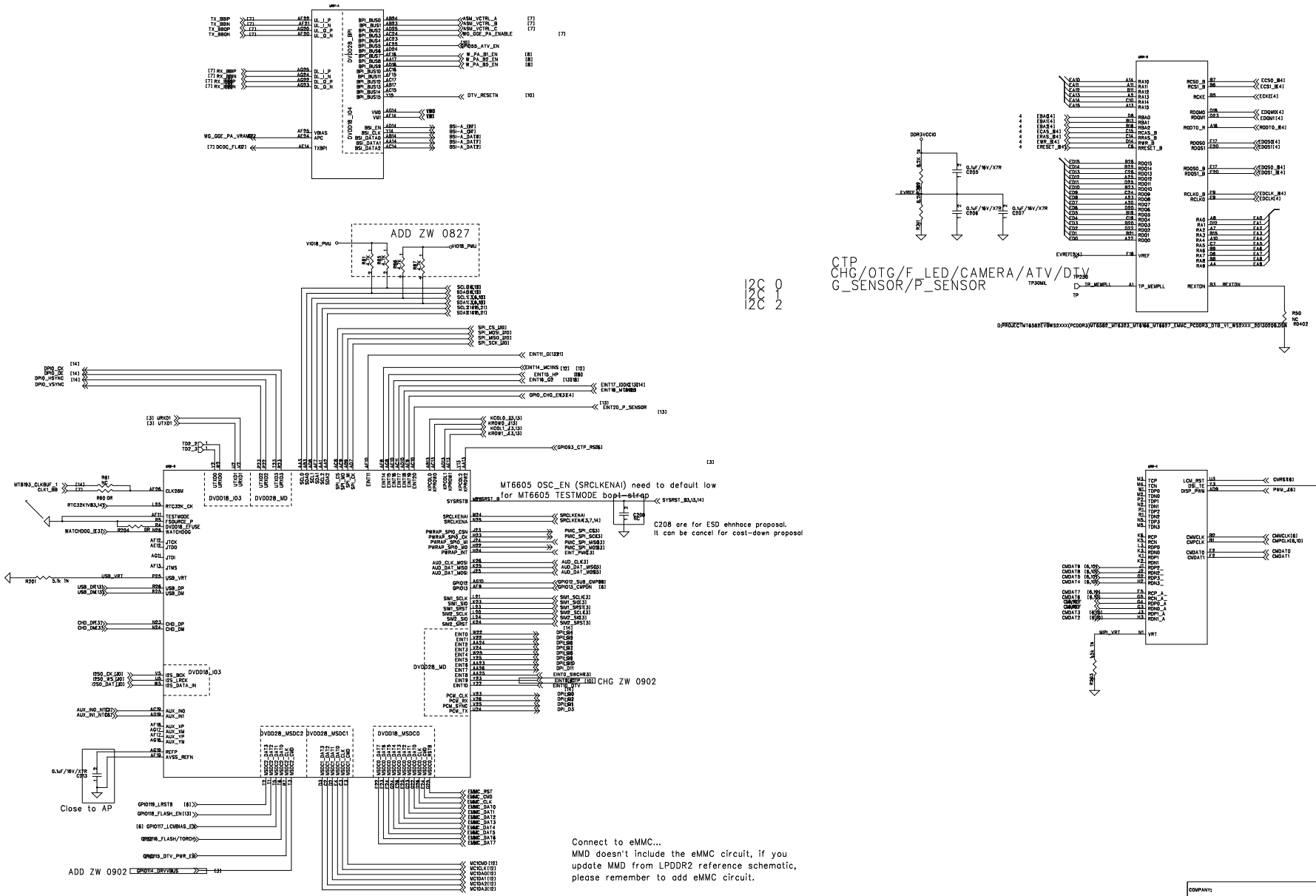

COMPANY:					
TITLE:					
DRAWN:	DATE:				
CHECKED:	DATE:	CODE:	SIZE: A1	DRAWING NO:	REV:
QUALITY CONTROL:	DATE:				
RELEASED:	DATE:	SCALE:		SHEET: 2 OF 15	

REVISION RECORD			
LTR	ECO NO:	APPROVED:	DATE:

Charger

Switching Charger

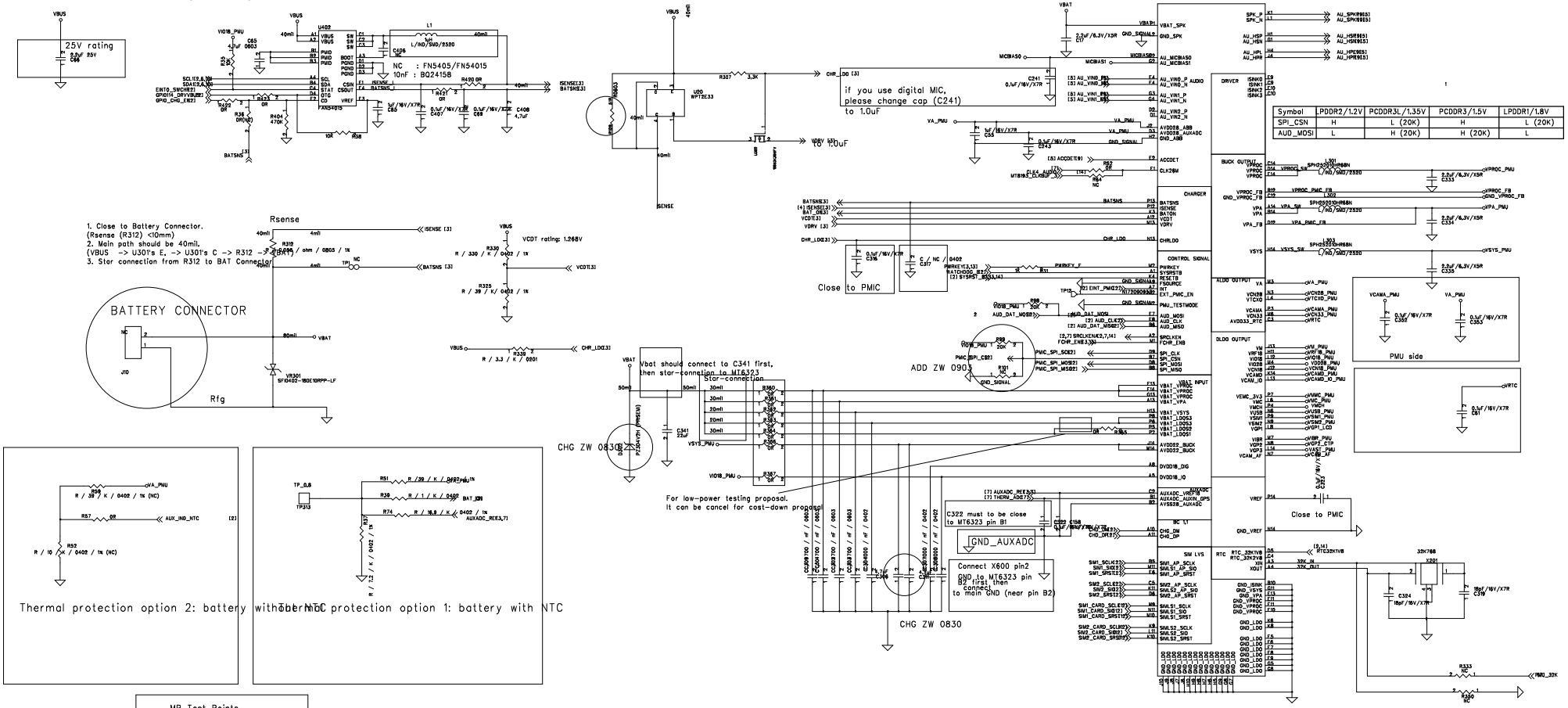

Symbol	LPDDR2/1.2V	PCDDR3L/1.35V	PCDDR3/1.5V	LPDDR1/1.8V
SPI_CSN	H	L (20K)	H	L (20K)
AUD_MOSI	L	H (20K)	H (20K)	L

RTC 32K :
(1) X301 / C324 / C319 = mount
(2) R333 / R350 = NC

RTC 32K-less (NOT MP yet)
(1) X301 / C324 / C319 = NC
(2) R333 / R350 = 0R

COMPANY:			
TITLE:			
DRAWN:	DATE:		
CHECKED:	DATE:		
QUALITY CONTROL:	DATE:		
RELEASED:	DATE:		
CODE:	SIZE: A1	DRAWING NO:	REV:
SCALE:	SHEET: 3 OF 15		

REVISION RECORD			
LTR	ECO NO:	APPROVED:	DATE:

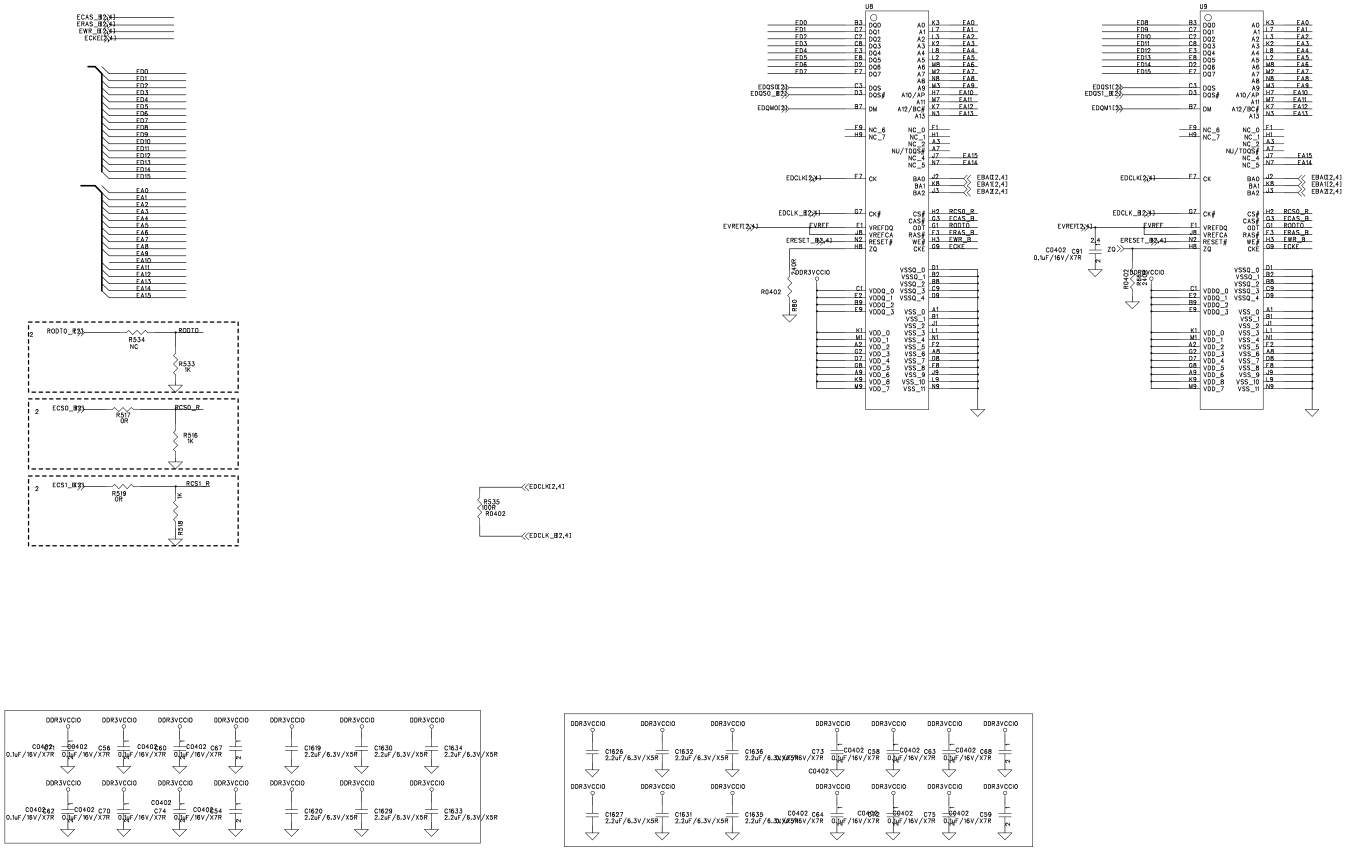

DRAWN:	DATED:
CHECKED:	DATED:
QUALITY CONTROL:	DATED:
RELEASED:	DATED:

COMPANY:

TITLE:

CODE:	SIZE: A1	DRAWING NO:	REV:

SCALE:

REVISION RECORD			
LTR	ECO NO:	APPROVED:	DATE:

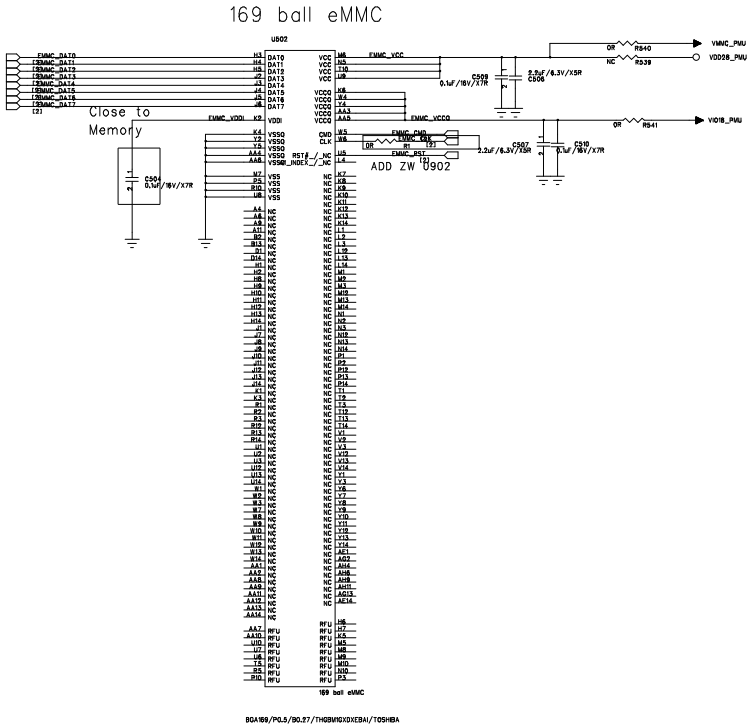

COMPANY:					
TITLE:					
DRAWN:	DATED:				
CHECKED:	DATED:	CODE:	SIZE: A1	DRAWING NO:	REV:
QUALITY CONTROL:	DATED:				
RELEASED:	DATED:	SCALE:		SHEET: 5 OF 15	

REVISION RECORD			
LTR	ECO NO:	APPROVED:	DATE:

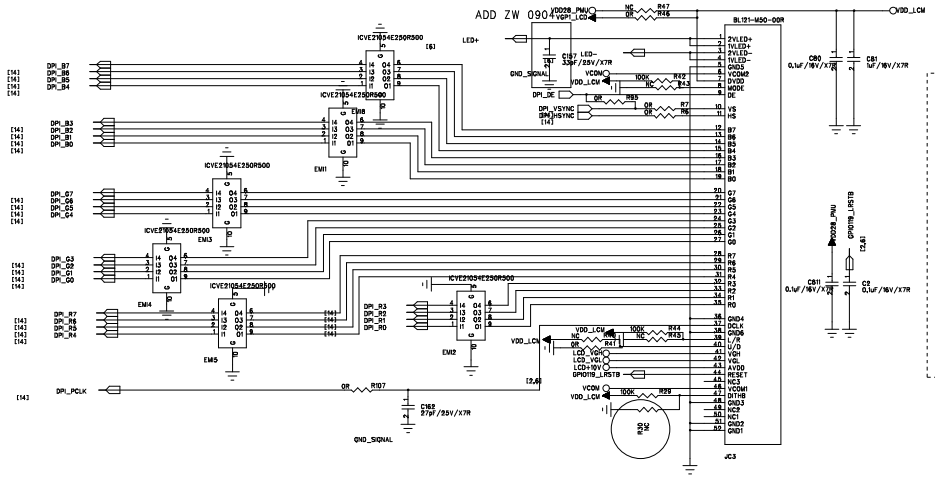

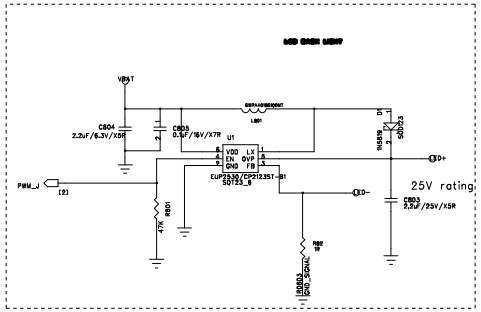

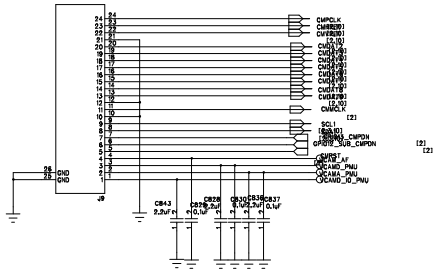

Capacitive Touch Panel

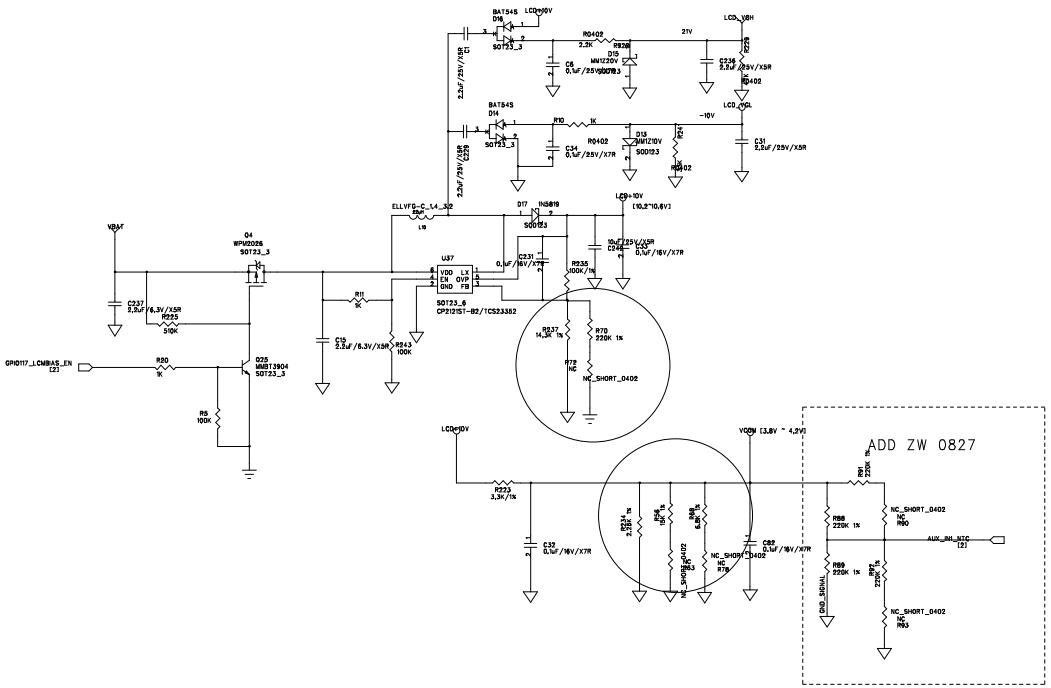

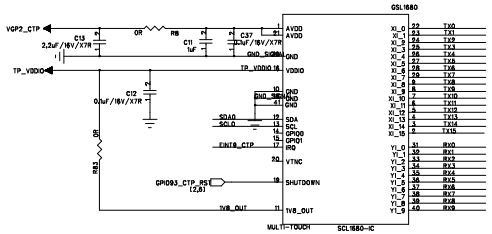

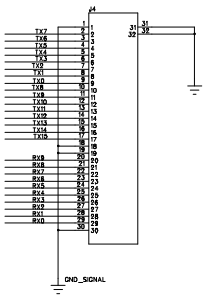

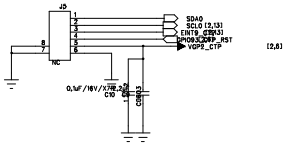

Capacitive Touch Panel

COMPANY:			
TITLE:			
DRAWN:	DATE:		
CHECKED:	DATE:		
QUALITY CONTROL:	DATE:		
RELEASED:	DATE:		
CODE:	SIZE: A1	DRAWING NO:	REV:
SCALE:		SHEET: 6 OF 15	

REVISION RECORD			
LTR	ECO NO:	APPROVED:	DATE:

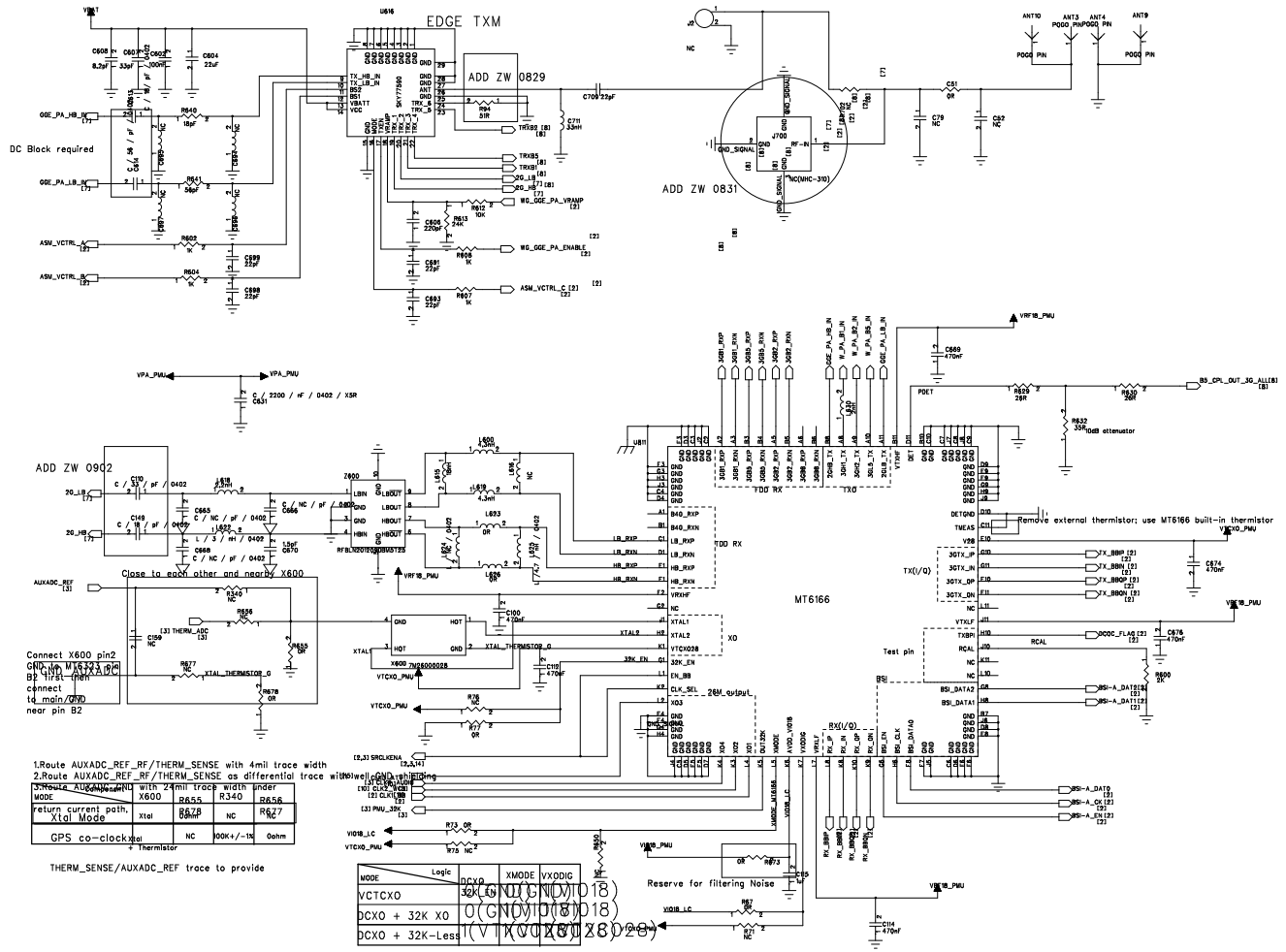

1.Route AUXADC_REF_RF/THERM_SENSE with 4mil trace width
2.Route AUXADC_REF_RF/THERM_SENSE as differential trace with well GND shielding

Component	X600	R655	R340	R656
MODE				
return current path, Xtal Mode	Xtal	R678 0ohm	NC	R677 NC
GPS co-clock	Xtal + Thermistor	NC	100K+/-1%	0ohm

THERM_SENSE/AUXADC_REF trace to provide

MODE \ Logic	DCXO	XMODE	VXODIG
VCTCXO	32K_EN	[illegible]	[illegible]
DCXO + 32K XO	[illegible]	[illegible]	[illegible]
DCXO + 32K-Less	[illegible]	[illegible]	[illegible]

COMPANY:			
TITLE:			
DRAWN:	DATED:		
CHECKED:	DATED:	CODE:	SIZE: A1
QUALITY CONTROL:	DATED:	DRAWING NO:	REV:
RELEASED:	DATED:	SCALE:	SHEET: 7 OF 15

REVISION RECORD			
LTR	ECO NO:	APPROVED:	DATE:

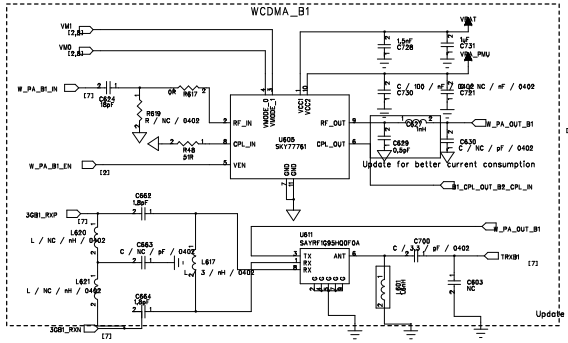

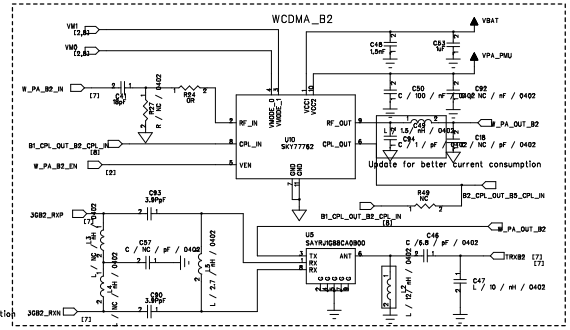

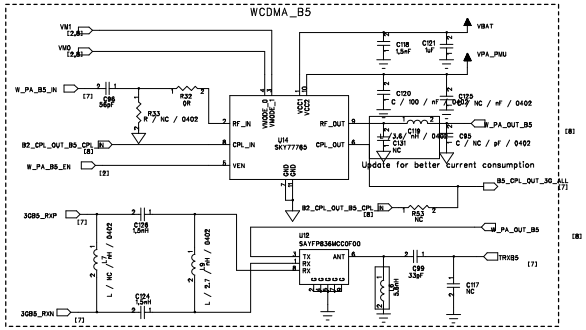

COMPANY:			
TITLE:			
DRAWN:	DATE:		
CHECKED:	DATE:	CODE:	SIZE: A1 / DRAWING NO: / REV:
QUALITY CONTROL:	DATE:		
RELEASED:	DATE:	SCALE:	SHEET: 8 OF 15

REVISION RECORD			
LTR	ECO NO:	APPROVED:	DATE:

Handset Microphone 1

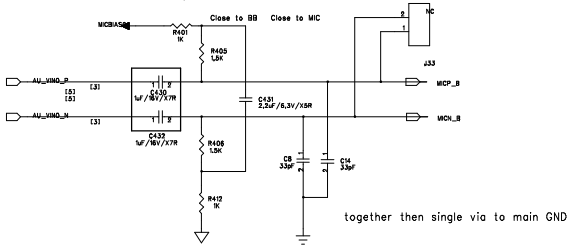

Earphone MICPHONE

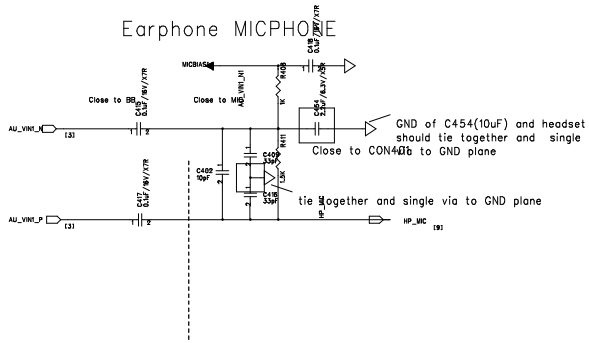

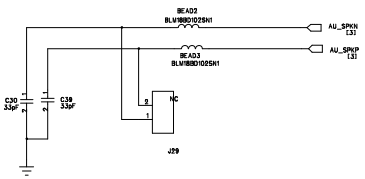

Audio Jack

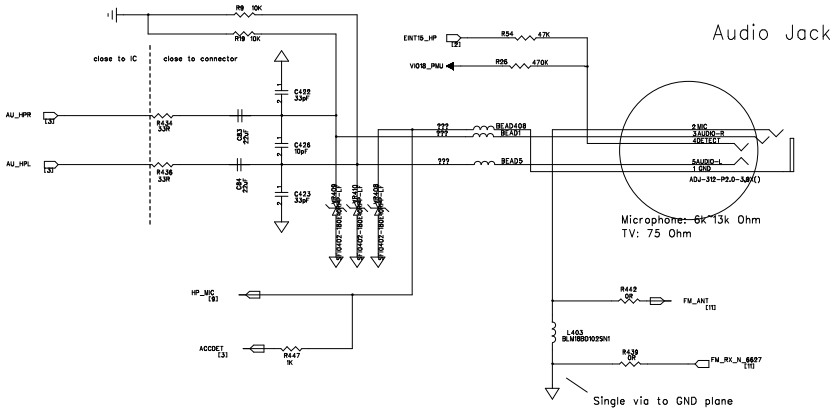

HANDSET RECEIVER

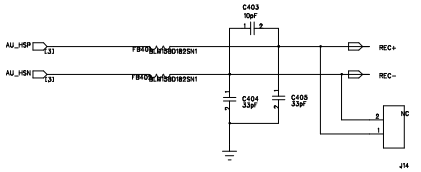

COMPANY:					
TITLE:					
DRAWN:	DATED:	CODE:	SIZE: A1	DRAWING NO:	REV:
CHECKED:	DATED:				
QUALITY CONTROL:	DATED:				
RELEASED:	DATED:	SCALE:		SHEET: 9 OF 15	

REVISION RECORD			
LTR	ECO NO:	APPROVED:	DATE:

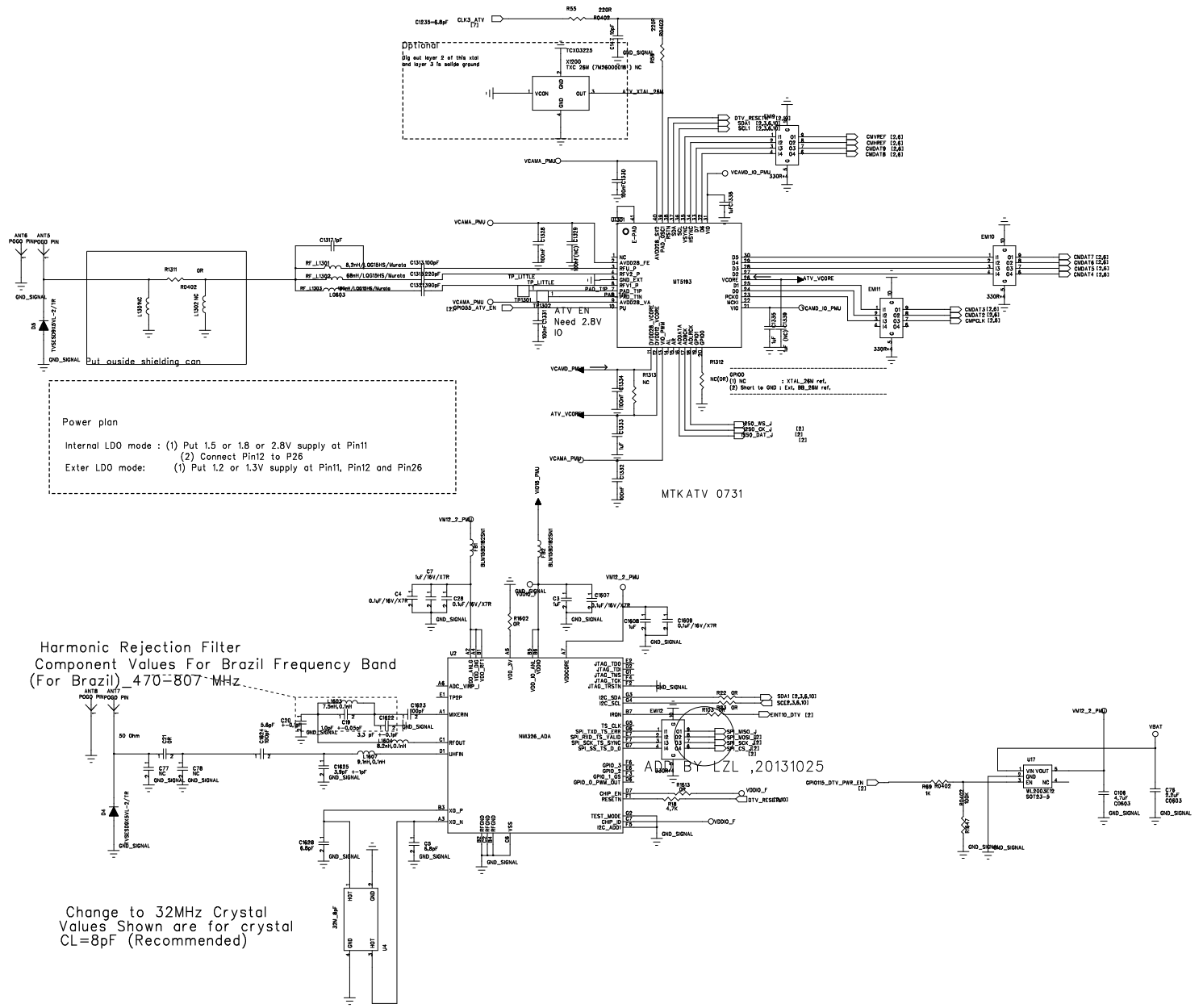

COMPANY:			
TITLE:			
DRAWN:	DATE:		
CHECKED:	DATE:	CODE:	SIZE: A1 / DRAWING NO: / REV:
QUALITY CONTROL:	DATE:		
RELEASED:	DATE:	SCALE:	SHEET: 10 OF 15

REVISION RECORD			
LTR	ECO NO:	APPROVED:	DATE:

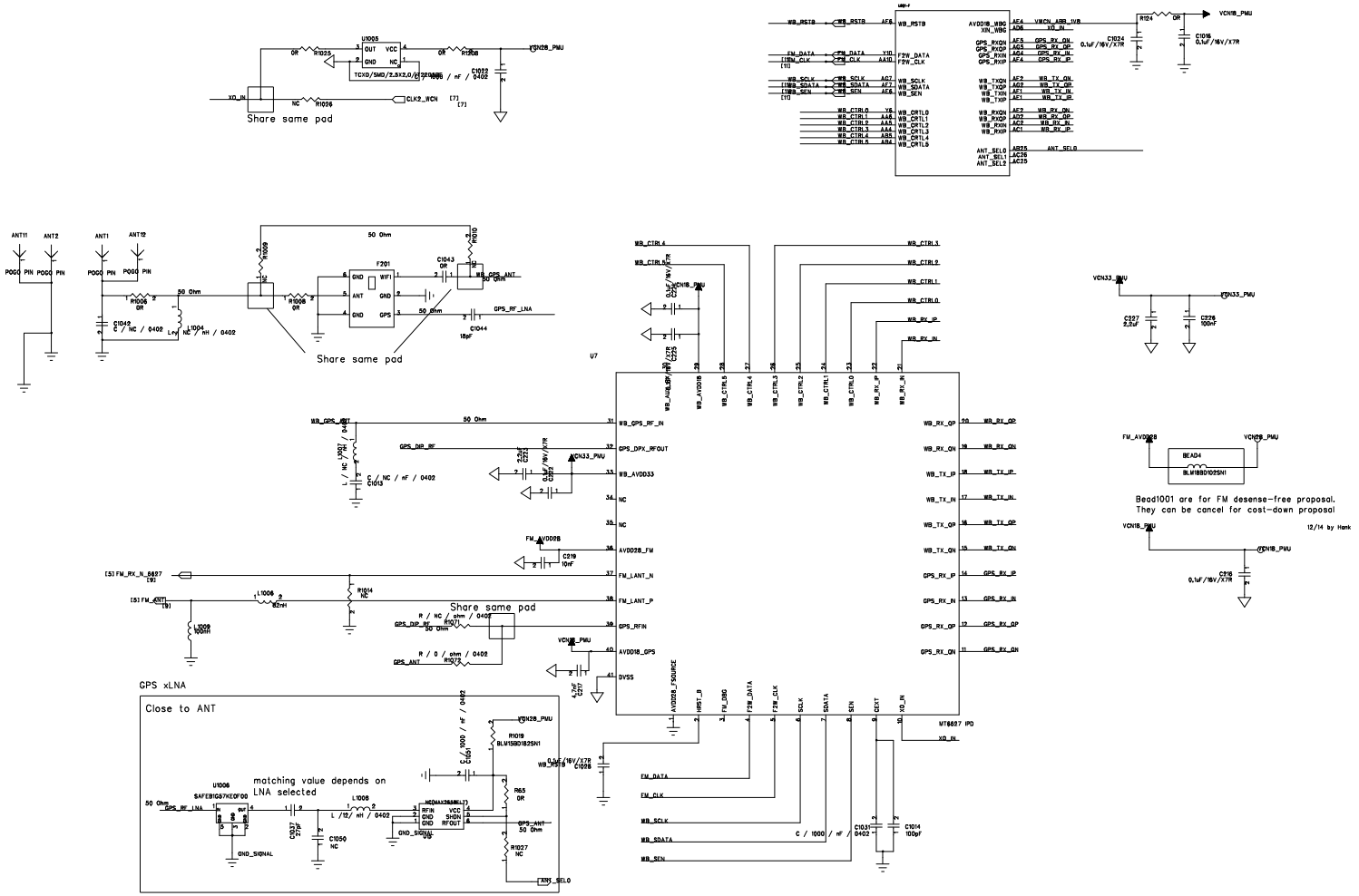

DRAWN:	DATE:	COMPANY:			
CHECKED:	DATE:	TITLE:			
QUALITY CONTROL:	DATE:	CODE:	SIZE: A1	DRAWING NO:	REV:
RELEASED:	DATE:	SCALE:	SHEET: 11 OF 15		

REVISION RECORD			
LTR	ECO NO:	APPROVED:	DATE:

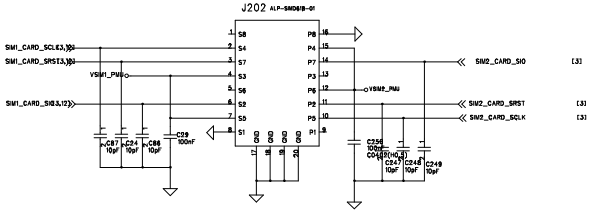

MCOCK with GND shield

Shielding connect to ground

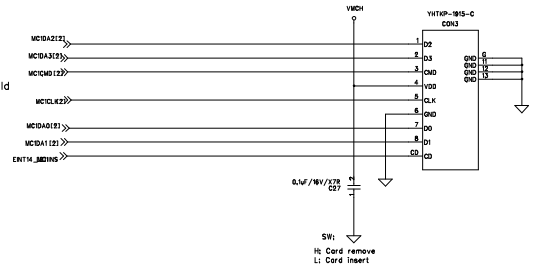

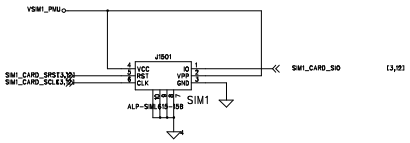

DRAWN:	DATED:	COMPANY:			
		TITLE:			
CHECKED:	DATED:	CODE:	SIZE: A1	DRAWING NO:	REV:
QUALITY CONTROL:	DATED:				
RELEASED:	DATED:	SCALE:		SHEET: 12 OF 15	

REVISION RECORD			
LTR	ECO NO:	APPROVED:	DATE:

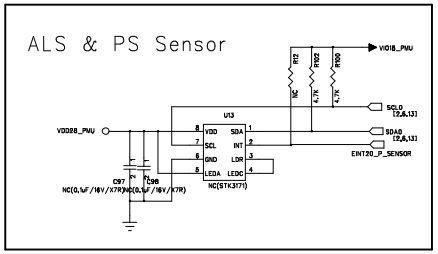

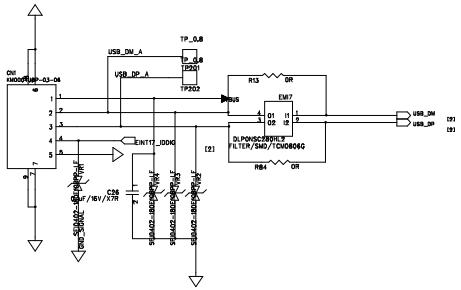

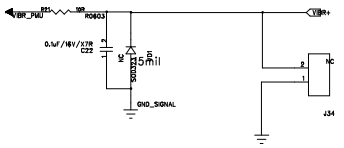

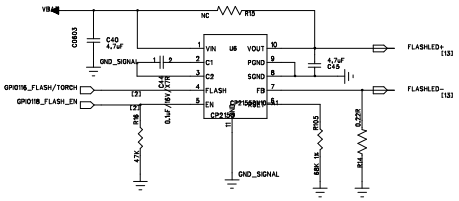

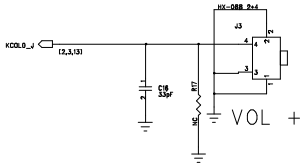

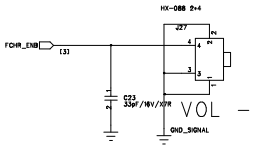

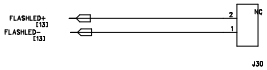

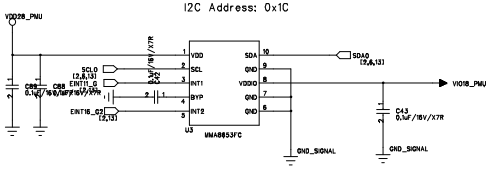

3

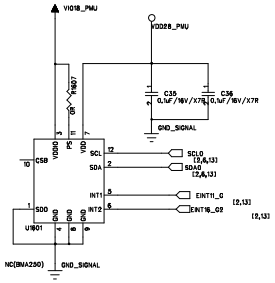

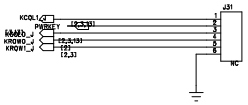

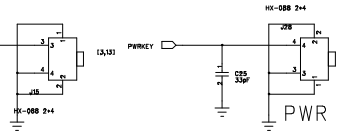

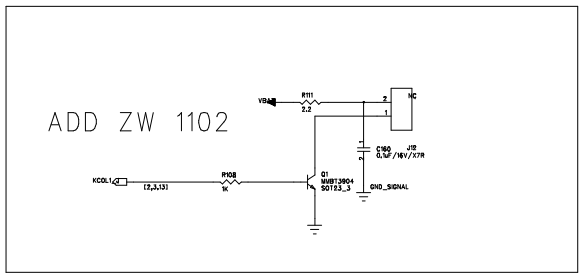

COMPANY:			
TITLE:			
DRAWN:	DATE:		
CHECKED:	DATE:	CODE:	SIZE: A1 / DRAWING NO: / REV:
QUALITY CONTROL:	DATE:		
RELEASED:	DATE:	SCALE:	SHEET: 13 OF 15

REVISION RECORD			
LTR	ECO NO:	APPROVED:	DATE:

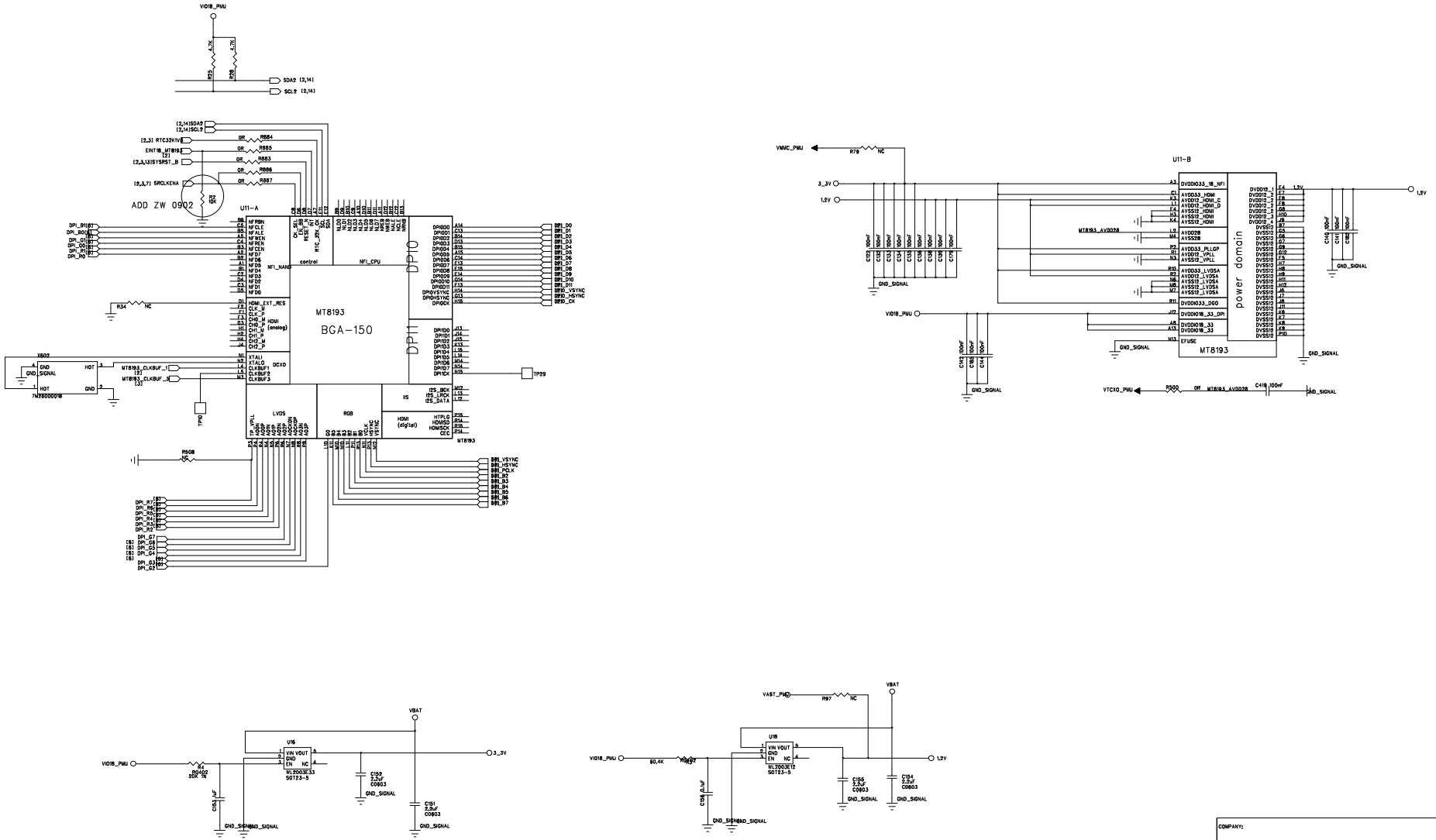

DRAWN:	DATED:	COMPANY:			
CHECKED:	DATED:	TITLE:			
QUALITY CONTROL:	DATED:	CODE:	SIZE: A1	DRAWING NO:	REV:
RELEASED:	DATED:	SCALE:	SHEET: 14 OF 15		

10/15 LDO U16 U17 U18

10/15 LCD CTP VGP2 3.3V

10/15 GPIO93_DRVVBUS GPIO114_CTP_RST

10/15 GPIO119_LRSTB GPIO116_FLASH/TORCH GPIO114_DRVVBUS CMRST

REVISION RECORD			
LTR	ECO NO:	APPROVED:	DATE:

DRAWN:	DATED:
CHECKED:	DATED:
QUALITY CONTROL:	DATED:
RELEASED:	DATED:

COMPANY:

TITLE:

CODE:	SIZE:	DRAWING NO:	REV:
	A1		

SCALE: SHEET: 15 OF 15